SMART
SENSOR
BUSINESS

Leuze electronic

the sensor people

Figure can vary

Part no.: 50132987
MSI 420-03
Safety control

Contents

- Technical data
- Dimensioned drawings
- Electrical connection
- Circuit diagrams
- Notes
- Accessories

Technical data

Basic data	
Series	MSI 420
Application	Monitoring of safety functions
Number of safe I/Os	16 IN, 4 OUT, 4 programmable I/O

Functions	
Functions	Additional I/O extensions available (optional) Configurable safety control Configuration via MSI.designer software Ethernet interface Removable program memory (must be ordered separately, part no. 50132996) Transfer of diagnostic data via external fieldbus modules, e.g. MSI-FB-PROFIBUS (optional) USBmini interface

Characteristic parameters	
SIL	3 , IEC 61508
SILCL	3 , IEC/EN 62061
Performance Level (PL)	Up to and including e , EN ISO 13849-1
PFH_D	0.0000000043 per hour
PFH_D	4,3E-09 per hour
Mission time T_M	20 years , EN ISO 13849-1
Category	4 , EN ISO 13849

Electrical data	
Performance data	
Supply voltage U_B	24 V , DC , -30 ... 25 %
Power consumption, max.	3.3 W
Output circuit	
Number of outputs	8 Piece(s)
Max. number of integrated digital outputs	8 Piece(s)
Type of digital output	Transistor
Short circuit protection, outputs	Yes
Min. voltage permitted at the output	16.2 V
Max. voltage permitted at the output	30 V
Output current	4 A
Control circuit	
Number of inputs	16 Piece(s)
Voltage permitted at the input	30 V
Max. rated control supply voltage at DC	30 V
Min. rated control supply voltage at DC	15.6 V
Input current at signal 1	2.3 mA

Interface	
Type	Internal bus (SBUS+)

Service interface	
Type	Ethernet USB

Ethernet	
Function	Configuration via software
USB	
Function	Configuration via software

Connection	
Number of connections	3 Piece(s)
Connection 1	
Type of connection	Terminal
Function	Signal IN Signal OUT Voltage supply
Type of terminal	Spring-cage terminal
No. of pins	32 -pin
Connection 2	
Type of connection	USB
Function	Configuration interface
Connector type	USB 2.0 Mini-A
Connection 3	
Type of connection	RJ45
Function	BUS OUT
Cable properties	
Connection cross sections	2 x 0.2 to 1.5 mm², wire 2 x 0.2 to 1.5 mm², wire 2 x 0.25 to 1.5 mm², wire with wire-end sleeve (pressed in trapezium shape)

Mechanical data	
Dimension (W x H x L)	45 mm x 107 mm x 121 mm
Net weight	290 g
Housing color	Gray
Type of fastening	Snap-on mounting

Operation and display	
Type of display	LED indicator
Type of configuration	Software

Environmental data	
Ambient temperature, operation	-25 ... 65 °C
Ambient temperature, storage	-25 ... 70 °C
Relative humidity (non-condensing)	10 ... 95 %

Certifications	
Degree of protection	IP 20
Protection class	III
Certifications	c UL US TÜV Rheinland
Vibration resistance	5 ... 150 Hz
Test procedure for oscillation in accordance with standard	EN 60068-2-6
Shock resistance, single shock	30 g, 11 ms, EN 60068-2-27
Shock resistance, continuous shock	10 g, 16 ms, EN 60068-2-29

Classification	
Customs tariff number	85371091
eCl@ss 8.0	27243101
eCl@ss 9.0	27243101
ETIM 5.0	EC002538
ETIM 6.0	EC002538

Dimensioned drawings

All dimensions in millimeters

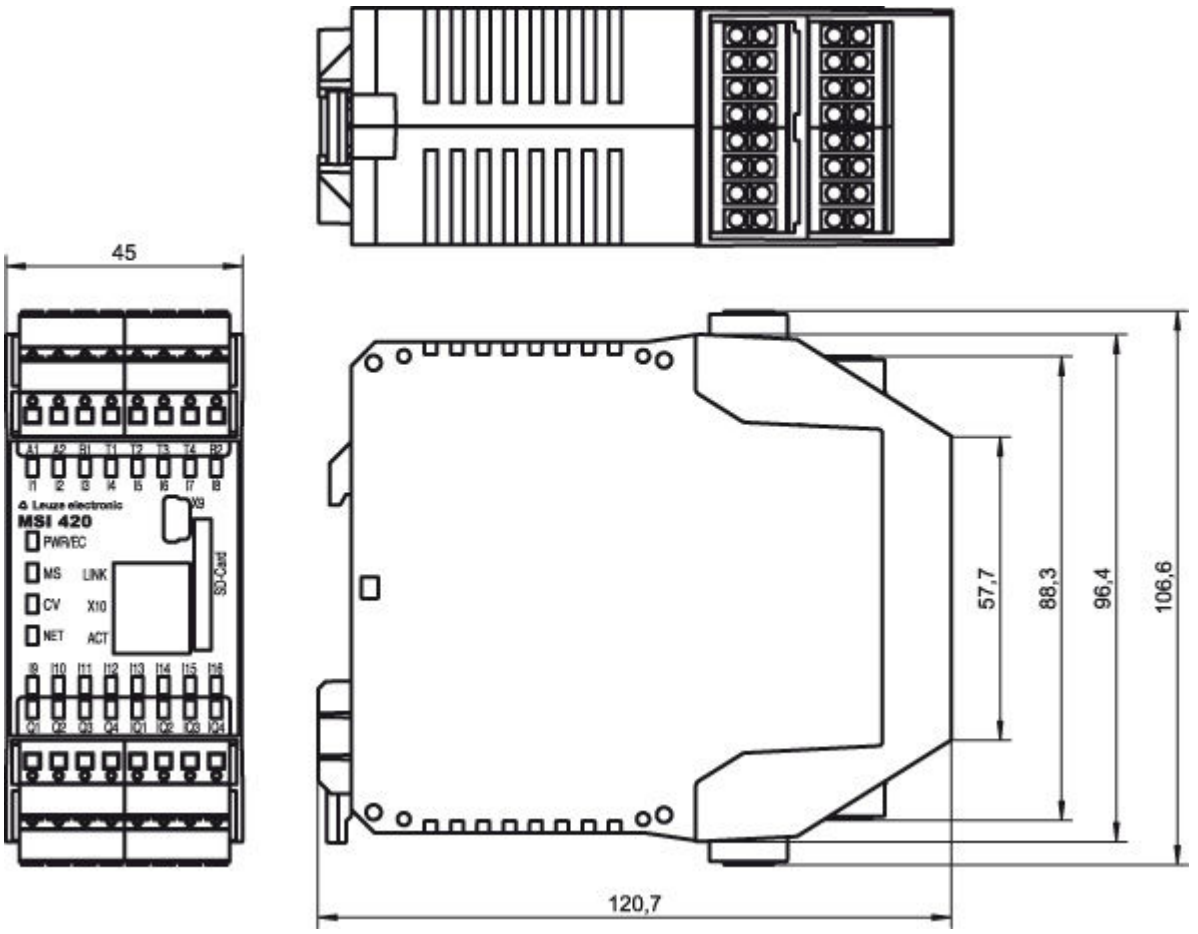

Electrical connection

Connection 1	
Type of connection	Terminal
Function	Signal IN Signal OUT Voltage supply
Type of terminal	Spring-cage terminal
No. of pins	32 -pin

Part no.: 50132987 – MSI 420-03 – Safety control

Terminal	Assignment
A1	+24V
A2	GND
B1	+24 V (outputs Q1 - Q4)
B2	+24 V (outputs IQ1 - IQ4)
I1	Safe input
I2	Safe input
I3	Safe input
I4	Safe input
I5	Safe input
I6	Safe input
I7	Safe input
I8	Safe input
I9	Safe input
I10	Safe input
I11	Safe input
I12	Safe input
I13	Safe input
I14	Safe input
I15	Safe input
I16	Safe input
IQ1	Safe input/output (configurable)
IQ2	Safe input/output (configurable)
IQ3	Safe input/output (configurable)
IQ4	Safe input/output (configurable)
Q1	Safe output
Q2	Safe output
Q3	Safe output
Q4	Safe output
T1	Test signal output
T2	Test signal output
T3	Test signal output
T4	Test signal output

Connection 2	X9
Type of connection	USB
Function	Configuration interface
Connector type	USB 2.0 Mini-A

Connection 3	X10
Type of connection	RJ45
Function	BUS OUT

Circuit diagrams

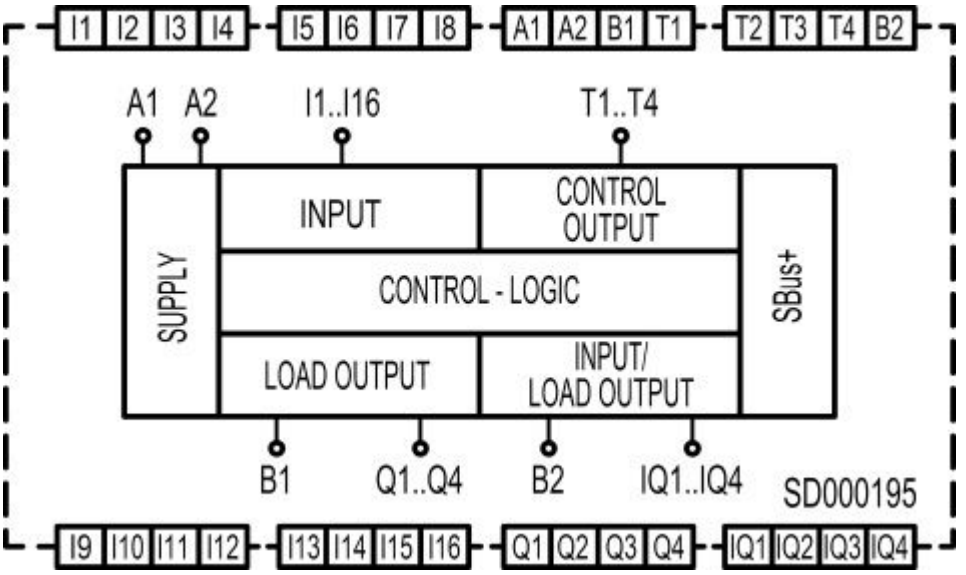

Notes

Observe intended use!
• The product may only be put into operation by competent persons. • Only use the product in accordance with its intended use.

Accessories

Start-up/diagnosis

	Part no.	Designation	Article	Description
	50117011	KB USB A - USB miniB	Service line	Suitable for interface: USB Connection 1: USB Connection 2: USB Shielded: Yes Cable length: 1,500 mm Sheathing material: PVC

General

	Part no.	Designation	Article	Description
	50132996 *	MSI-SD-CARD	Program memory	

Part no.: 50132987 – MSI 420-03 – Safety control

	Part no.	Designation	Article	Description
	50133002	MSI-SD-COVER	Cover	Contains: 10x MSI-SD-COVER

* Necessary accessories, please order separately

Services

	Part no.	Designation	Article	Description
	S981043	CS40-E-312	Hourly rate for "Safety Engineering"	Details: Location and content to be agreed upon. Conditions: Price not including travel costs and, if applicable, accommodation expenses. Restrictions: Travel costs and accommodation expenses charged separately and, if applicable, according to expenditure.
	S981029	CS40-T-110	Product training	Details: Location and content to be agreed upon, duration: max. 10 hours. Conditions: Price not including travel costs and, if applicable, accommodation expenses. Restrictions: Travel costs and accommodation expenses charged separately and according to expenditure.